ISSN 2522-9400 **European Modern Studies Journal** Vol 7 No 6
available at www.journal-ems.com
DOI: 10.59573/emsj.7(6).2023.22

Towards 6G Energy Sustainability: An Unmanned Aerial Vehicle Energy Efficiency Model in a Hybrid-Tier Heterogeneous Network

Chigozirim Ajaegbu[1], Ngige Ogochukwu Constance[2], Oyerinde Emmanuel Ifeoluwa[3]
[1]Computer Science Department, Babcock University, Ilishan-Remo, Ogun State, Nigeria
[2]Federal Institute of Industrial Research Oshodi, Lagos, Nigeria
[3]Information Technology Department, Babcock University, Ilishan-Remo, Ogun State, Nigeria

Abstract. Studies have shown that one of the major design principles of 6G technology is to achieve seamless heterogeneous network integration of space, air, ground, and sea. This study argues that the roles of satellites and unmanned aerial vehicles (UAV) cannot be underestimated in achieving such seamless connectivity within the 6G network. While few studies have focused on power control management centered around 5G technology, using a binary exponential algorithm, this approach was not sufficient to guarantee a step-by-step power control adjustment in UAV connection establishment. Hence, a modified power control factor that offers better step-by-step power control, along with a power regeneration algorithm, has been proposed for 6G technology. The regeneration algorithm developed is intended to regenerate one-fifth of the used UAV operation power for every 25 minutes of UAV operation. As such, numerical computations show an adaptable model to extend UAV power if needed, and this would greatly benefit the integration of upcoming 6G technology. The study further highlights some socio-economic implications of 6G technology and UAV power management that policymakers need to pay attention to.

Keywords: 6G technology, Unmanned Aerial Network, Heterogenous Network, Satellite Network, Energy Efficiency

Introduction

As digitalization continues to permeate every facet of life, the digitization of socio-economic activities and data usage has witnessed a significant increase. To accommodate such an increase, the capability and resilience of the underlying communication networks continue to evolve, with the latest being the conceptualization of 6G (6th generation) (Gawas, 2015; Liu et al, 2020). From 1G to 5G, generations of communication networks have enabled the metamorphosis of industrial revolutions and the prevailing digital economy with varying degrees of innovations, as illustrated in Table 1.

Table 1: A summary of the evolution of communication networks

Generation	Key feature and capability
1G	Analog technology, voice calls
2G	Digital technology, voice calls, SMS and MMS messaging, 64Kbps data speed, 25MHz bandwidth
3G	Digital technology, voice calls, SMS and MMS messaging, 2Mbps data speed, 25MHz bandwidth, broadband capabilities
4G	Digital technology, voice calls, SMS and MMS messaging, interactive MMS, 20-50Mbps data speed, 100MHz bandwidth, ultra-broadband capabilities

5G	Digital technology, voice calls, SMS and MMS messaging, interactive MMS, 10Gbps data speed, 30-300 GHz bandwidth, wireless world wide web capabilities
6G	6G proposes to integrate 5G feature and capability with satellite networks and make AI and IoT pervasive with data speed up to 1Tbps

Compiled by the Authors from Various Sources

Given the inherent limitations in previous communication networks (e.g., limited connectivity of devices and socio-economic activities, latency, energy efficiency, data security affordability, and universal broadband), the conceptualization of 6G is underway to mitigate these shortcomings (Liu et al, 2020; Oughton & Jha, 2021). To put things in perspective, Singh et al (2007) has long established that a typical 5G network has a limited capacity to support around 50,000 pieces of Internet-of-Things (IoT). In contrast, 6G would provide a more resilient and faster network architecture for the integration of Internet-of-Things (IoT), including the connectivity of socio-economic activities with aerial, maritime, satellite, and terrestrial infrastructure (Akhtar et al, 2020). Further, a next-generation network such as 6G is fundamental to the pervasiveness of AI and other forms of advanced technologies that would drive the future of socio-economic activities in the 4IR (Arakpogun et al, 2021; Kshetri, 2020).

While some may argue that discussing the development of 6G is too early, given the lack of 4G and 5G ubiquitous coverage across developing and developed countries, respectively Arakpogun et al (2020), the need to plan and embrace 6G conceptualization cannot be overstated. For example, given that 5G and 6G will be critical in driving the current wave of the 4th industrial revolution (4IR), failing to establish a clear implementation and adoption policy can be counterproductive. This is consistent with the submission that the lack of institutional preparedness and policy framework for past and emerging communication networks are partly the reasons why developing countries, such as those in Africa, have not maximized the benefits of previous industrial revolutions (Arakpogun et al, 2021). Moreover, developing and developed countries that lack ubiquitous coverage of, for example, 4G and 5G networks can leapfrog into 6G, as evident in most African countries where mobile telephony was used to leapfrog the poor legacy of fixed lines development (Arakpogun et al, 2017).

Therefore, given the critical role of 6G in driving the emerging 4IR, failure to plan and embrace the conceptualization of such a generation of communication network has far-reaching socio-economic implications. For example, the ongoing COVID-19 pandemic has greatly underlined the critical role of high-quality connectivity. For example, as countries around the world went into lockdown, digitalization provided an invaluable means of bypassing our traditional way of life (Souter, 2021). For instance, the unprecedented use of digital platforms (e.g., Blackboard, Microsoft Teams, and Zoom) enabled communication, education, and homeworking, while e-commerce (e.g., Amazon and Alibaba) drove the exchange of goods and services. As COVID-19 restrictions markedly transformed societal behavior, more socio-economic activities were forced online, leading to an increasing network capacity and quality of service (QoS) problem. For example, homeworking increased Internet connectivity demand by 80% in Australia and 60% among the 1.3 billion people in OECD countries (Hobday & Sas, 2021; OECD, 2020).

From Argentina to Algeria, Canada to China, Saudi Arabia to Switzerland, the communication networks of countries across the world faced varying degrees of congestion problems (Angus, Raschky, & Ackermann, 2020). In fact, evidence from KASPR Datahaus indicated that countries with higher COVID-19 restrictions experienced higher Internet congestion problems (Angus, Raschky, & Ackermann, 2020). Aside from releasing a more affordable spectrum to network operators, governments across the world need to establish favorable policies to provide the enabling environment for the buildout of hyper-speed

communication networks such as 6G. This, in turn, would improve the resilience and speed of Internet connectivity to better withstand the occurrence of future black swan events like COVID-19.

In addition to providing future-proof connectivity to power socio-economic activities, a higher generation communication network such as 6G has further societal implications for the emerging 4IR. For example, adapting and scaling China's AI-enabled Ant Financial as opined by Knight (2017), can help speed up fintech development around the world and close financial inclusion gaps for over 1.5 billion unbanked, particularly for those in developing countries (Shirotori et al, 2021; World Bank, 2019). The collaboration between farmers in Tanzania and Google AI lab in creating 'Nuru' – a diagnostic machine-learning application - has enabled early detection of cassava plant disease, which, in turn, advances the production of a popular staple crop across Africa (Alcober, 2018). Building a resilient and faster communication network can help scale such initiatives to address the problem of food security in, for example, Sub-Sahara Africa (Ehui, 2020; Food and Agriculture Organization, 2019). Given the fundamental role of AI and higher generation communication networks for the 4IR (Kshetri, 2020), a robust 6G policy framework would attract the jobs of the future and improve the employment situation in countries where the buildout of such infrastructure is encouraged. See Arakpogun et al (2021) and Lee (2018) for the case of Kenyans using AI to 'train' driverless cars.

Speaking of employment, given the automation of work processes and supply chain that is expected to dominate the 4IR (Kshetri, 2020), it is also argued that the pervasive use of higher generation communication networks in the Global North (6G in this case) could displace jobs in the Global South (Arakpogun, 2021). For example, an AI-automated process powered by the pervasiveness of 6G in developed countries could reduce the outsourcing of goods and services produced in developing countries (Manning, 2018). Therefore, while a hyper-fast and resilient network such as 6G provides a raft of positive socio-economic benefits as demonstrated above, it could also present varying degrees of paradoxical challenges, including the possibility of a looming unemployment crisis in developing countries. Furthermore, scholars have argued that the emerging 4IR would further entrench existing structural inequalities (Arakpogun et al, 2021; Schwab, 2017). For example, developing countries such as those across Africa are disproportionately disadvantaged when it comes to digital divides and the lack of other socio-economic resources (UNHDR, 2018). As such, if governments in such economies do not carry out their due diligence and institute a well-thought-out policy framework for the 4IR and higher generation communication networks such as 6G, the level of poverty and inequality could be worsened.

Studies have shown that the emergence of 5G technology was to improve upon the existing 4G network (You et al, 2020). However, it has been observed that 5G requirements would not be fully implemented till 2030 and beyond. Hence the focus on 6G with one of the major aims of achieving global seamless coverage - an attribute currently lacking in 5G (You et al, 2020). On the other hand, integration studies on 5G technology have progressed in different directions: the integration of satellite communication and 5G, integration of Unmanned Aerial Vehicular (UAV) Network and 5G as well as the integration of space-air-ground network (You, 2020). However, the craving demands of humans for better technology require more complete network integration to accommodate the linkages of space, air, ground, and sea capabilities and technologies. Hence, to establish a 6G energy sustainability model in this study, the rest of the paper will address critical aspects such as: Review of related works, the role of satellite network to terrestrial network, Unmanned Aerial Network and wireless network, energy efficiency management in UAV and power management system model.

Literature Review

Sekaran (2020) explored the security measures of blockchain-enabled IoT with a 6G communication network. In their study, they projected possible challenges in the integration of Blockchain and IoT technologies and proffered solutions to mitigate against such challenges. In addition, it was deemed imperative to employ techniques that will improve the access efficiency of IoT devices in a bid to minimize energy consumption in the satellite communication scenario (Zhen, 2020). On the road towards 6G technology, a comprehensive survey of the four aspects of 6G was considered in recent advances and future trends (You, 2020). Further, IEEE 802.1ax was envisioned to play a major role in the future of multi-tier networks when deployed simultaneously to serve as competitors and complements (Oughton & Jha, 2021). Envisioning 6G as an upcoming technology and still in its early developmental stage, a speculative study was carried out looking at the possible enabling technologies and their innovative elements with the explanation of features beyond 5G (Tariq et al, 2020). Lu and Zheng (2020) surveyed 6G technologies, scenarios, challenges, and related issues with the intentions of clarifying directions for future study. Lee et al (2020) proposed an artificial intelligence-assisted network architecture to create a flexible 6G radio access network through energy gathering. Studies on the 6G ecosystem to review its latest perspectives and future megatrends that appear to be 6G drivers have also been conducted (Lee, 2020). Bhat & Alqahtani (2021) opined that 6G should be based on a novel architecture to be able to connect the world. As such, their study explored the possibilities of 6G network architecture as effective connectivity.

The review shows that 6G studies have mainly focused on the general overview of the technology without considering the role of the individual systems toward achieving expected 6G goals. Hence, the need to look at major contributions of 6G system drivers (with a focus on satellite and UAV network) in the existing network integrations and their ability to offer optimum sustainability in the upcoming 6G technology.

The Role of Satellite Communication Network in the Terrestrial Network

Satellite systems, as communication technology, have been seen as the most vital part of the future communication system. This perception has emerged because of its perceived advantages in terms of global coverage, mobility, and scalability (Li et al, 2017). Over the years, it has been identified as a communication technology for wide area coverage with attributed low power and poor efficiency (Evans, 2005). Studies (e.g., Evans (2005)) have predicted that the future of satellite systems is solely dependent on an integrated architecture with terrestrial networks to achieve a multimedia service encompassing mobile or fixed infrastructure. It has been identified and established that some of the major roles of traditional satellites are in the direction of broadcasting and multicasting the same content to a wide and geographically distributed audience (Courville et al, 2007). This reinforces the idea of using satellites to create a more sustainable system in 5G technology. The integration of satellites as an intrinsic member of the 5G system, added to the economical hope of 5G expectations, cannot be imagined with expensive terrestrial deployment (Kapovits et al, 2016).

Studies have shown that the involvement of satellite networking becomes apparent in the integration concept, either when its resources are embedded as a physical network function or by inclusion to virtualized components as controllable entities in the 5G system, seen as a greater relevance to the ecosystem (Boero, 2018). This shows that the concept of integrating satellites with terrestrial communication networks relates to the physical layer part of the infrastructure or the media access control (MAC) protocols (Sekaran, 2020). The emergence of 5G technology has opened a new era of cellular infrastructure as researchers have discovered a new opening to a greater and seamless global coverage in cellular technology. It is perceived

that it will alleviate the challenge of frequency scarcity by the creation of a cognitive terrestrial network, promising for upcoming future communication networks (Hu, 2017).

Moreover, the integration capability of satellites has clearly shown that it is the only technology with the ability to establish connectivity in the air, ground, and sea for moving objects such as planes, trains, and ships (Liolis, 2018). However, tilting towards this integration direction is a pure demonstration of the concept of the "Network of Networks," since different technologies and network stacks would be combined to exist as an entity (Bacco, 2019). One could argue that embracing this integration technique would lead to various architectural options of satellite and terrestrial networks (Jo, 2018) to be able to have effective and smooth connectivity among network nodes within the air-ground-sea as a system.

One of the promises of the upcoming 6G technology is the ability to coordinate all resources accordingly within space, air, ground, and sea. Studies have considered this as a possible challenge in the upcoming technology, and one of the management layers proposed in this direction is TELNET Architecture (Khalili, 2019). Although the architecture was proposed with the limitation of only considering 5G applications without a little provision for accommodating new features, there is no doubt that the satellite communication system is expected to contribute greatly to the vision of 6G technology in realizing various remote Internet of Things (IoT) applications (Zhen, 2020). With the globally acceptable fact that satellite technology has been envisioned as the major enabler for 6G technology, point-to-point link integration of satellite-aerial networks is becoming an interesting area of study (Saeed, 2021). Although satellites have a major role to play in 6G technology, the upcoming technology still needs a complete system to ensure its seamless delivery, as being proposed. Consequently, the need to also look at the roles of other technologies such as the UAV in the conceptualization of 6G.

Unmanned Aerial Vehicles and Wireless Network

Unmanned Aerial Vehicles (UAVs) have shown promise for the future of wireless networks. They are considered a viable solution for extending network coverage (see Figure 1) to areas where the terrestrial network is overloaded or in blind-spot locations (Hydher, 2020). UAV activity in extending coverage in overloaded areas has been effectively demonstrated and realized (Ajaegbu et al, 2019; Xu & Zeng, 2019). Its deployment within the terrestrial ecosystem has been impactful and is expected to become predominant in the next decade Azari (2018), thanks to features such as flexibility, ease of deployment, direct communication links with ground users, and automation (Manzoor et al, 2019).

UAVs offer the flexibility of operating with a joint radio resource with the terrestrial base station in a well-coordinated manner (Verdone & Mignardi, 2018). In the current 5G ecosystem, UAVs have been seen as a foundation for achieving maritime communication networks, as deploying communication infrastructure in the ocean is challenging (Li, 2020). Together with satellites in an integrated network (see Figure 2), beyond the extension of coverage, UAVs provide the needed solution for allowing data exchange with multiple devices, irrespective of their diverse communication protocols (Marchese, 2020). UAVs and satellites have been proposed as a solution to enable the vast set of IoT solutions yet to be properly integrated with 5G frameworks (Marchese, 2019). Some researchers perceive the space-air-ground architecture beyond the normal IoT, evolving into what is seen as the Internet of Remote Things (IoRT) as presented in Figure 3 (Li et al, 2020).

Despite the benefits that this integration scenario appears to offer, there are challenges presumed to be peculiar to a hybrid-tier heterogeneous network integration, such as deployment challenges, planning and mobility control challenges, operational altitude challenges, terrestrial-drone challenges, energy consumption challenges, limited endurance, lack of regulation, and provision of backhaul connection to cellular networks (Sekander, 2018). Cross-

tier interference, as one of the foreseen challenges, also highlights the need to focus more attention on power control management in the direction of the UAV network in a heterogeneous network (Wang, 2018). Hence, the need for UAV energy-efficient sustainability.

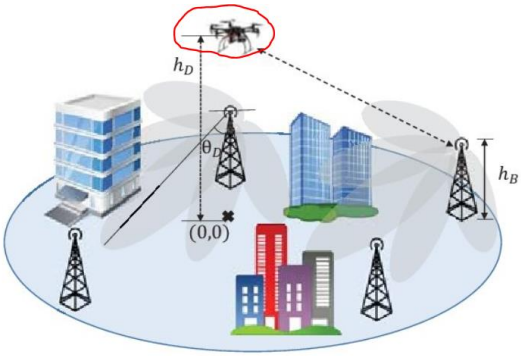

Figure 1

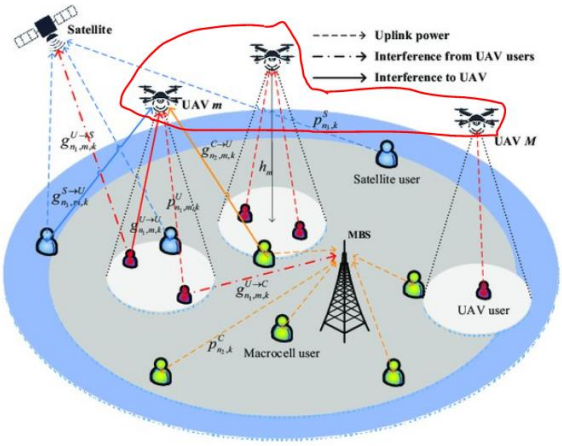

Figure 2

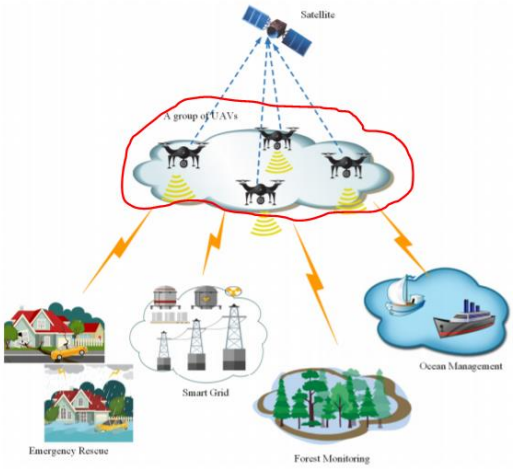

Figure 3

From a close observation of Figures 1, 2 and 3, some deductions could be made from the UAV's placement (as identified with the red mark) and involvement in the three presented figures.

- In Figure 1, the UVA device establishes link only to the ground stations.

- In Figure 2, UAV device link establishment is similar to that of Figure 1 with the exception that Figure 2 scenario presents better load balancing and wider coverage area with the involvement of satellite compared to Figure 1 counterpart.
- However, Figure 3 UAV link establishment appears in two directions where it could be seen to serve as a middleman between the space satellite and the ground base station.

Apart from Figure 3 achieving a well closed integrated system where each tier is adequately linked to one another, power sustainability becomes more paramount for UAVs in such integration scenario.

Energy Efficiency Management in UAV

One of the major challenges identified by researchers in the involvement of UAV in wireless is energy efficiency problems (Lu, 2020). A weighted power allocation framework has been proposed amid UAV and terrestrial networks for the purpose of offering demanded QoS to mobile nodes (Manzoor, 2019). It is evidence enough that the ground Base Station is strenuous to deploy and consumes a lot of power from connected mobile phones and with the current trend of wireless network deployment, energy efficiency becomes paramount to investigate. Such evidence could be seen from studies investigating energy efficient resource allocation with UAV-assisted space-air-ground IoRT (Li, 2019). The deployment of IoRT further opened and expanded research scope in the direction of power control. A two-stage joint hovering altitude and power control for UAV in a 3-tier heterogeneous network has been proposed (Wang, 2018).

These, however, show the need for studies to focus more on the power management of UAV to attain the expected seamless connectivity of 6G network.

System Model

Studies in the direction of UAV power management in a hybrid-tier heterogeneous network are quite limited. However, a joint UAV channel modelling and power control as studied by Fu (2021), gave a power control model which was used to study parameters such as: coverage probability, spectral efficiency and energy efficiency of the UAV system in the heterogeneous network. In their study, they adopted Binary exponential increase algorithm with a power control factor (denoted as) of 0.1. This enabled the UAV power to increase slowly when trying to access the channel from the BS.

The power control factor of the UAV transmitter was given as (Fu, 2021):

$$\epsilon = 2^{(i-1)} \times \epsilon_step \quad (1)$$

It is true that the above equation was proposed around 5G, hence it did not factor the need for possible adoption beyond 5G technology thus, it does not fully optimize the UAV power in the bid to access channel in consideration that UAV has to be positioned between a space satellite and the ground BS. Thus, this study proposed a modified power control as used by Fu (2021) that should better optimized UAV power in a 6G network. Hence, the power control factor of UAV transmitter was modified in this study as

$$\epsilon = (1/2^{(i-1)} \times 2) \times \epsilon_step \quad (2)$$

The above equation was used to further study the Coverage Probability, Spectral Efficiency and the Energy Efficiency numerically in comparison as presented by (Li, 2019).

Coverage Probability

The proposed power control factor adjusts the uplink transmission power of the UAV in order to compensate for the different path loss while establishing connection with the BS and satellite.

The Coverage Probability is given as (Fu et al., 2021):

$$P_c(\gamma) = exp(-\frac{N\gamma\varsigma}{P_0\varsigma^{\epsilon-1}}) \quad (3)$$

From numerical computation, it shows that the power control factor adopts a stepwise adjustment of the UAV transmission power which optimizes the UAV power when compared with the numerical output as demonstrated by (Fu, 2021).

Spectral Efficiency

The spectral efficiency is dependent on the coverage probability meaning that the spectral efficiency should exhibit the same changing effect as in coverage probability. Hence it is given as (Fu, 2021):

$$SE(\gamma_0) = \frac{N\varsigma}{P^u}\int_{\gamma_0}^{+\infty} \quad log_2(1+\gamma)exp(-\frac{N\gamma\varsigma}{P^u})d\gamma_0 \quad (4)$$

Where

$$P^u = min(P_0\varsigma^{\epsilon}, P_{max}) \quad (5)$$

$$P_{max} = 44.43dBm$$

Gotten from a prototype drone design as shown in Figure 4 where a 3S number of cells was used to generate an 11.1v of battery supply.

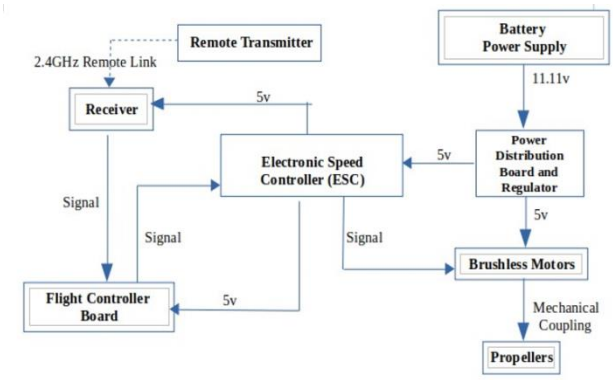

Figure 4: Block diagram of a drone

However, since (5) shows that the determinant of P^u is the minimum value of the two parameters in (5), hence it could be further reduced to

$$P^u = P_0\varsigma^{\epsilon} \quad (6)$$

Energy Efficiency (EE)

The energy efficiency has been described as the ratio of spectral efficiency to the UAV transmission power (P^u) (Fu, 2021). Hence, the changing pattern of EE should conform to the changing pattern of the spectral efficiency and has been given as:

$$EE = \frac{SE(\gamma_0)}{P^u}$$

To improve this energy efficiency further for the 6G technology, the study proposed further a power regeneration technique that should be able to regenerate 1/5 of the used battery life of the UAV for every 25mins of operation. Thus,

$$UAV\ max.Power = \frac{1}{UAV\ time\ of\ operation}$$

The algorithm is presented as follows:

Step 1:

Set UAV max. power to 44.43dBm.

Set UAV initial time of operation to 0mins

Step 2:

Set UAV power control step size value to 0.1 and increment the power control value by one step

Step 3:

Create a power regeneration technique

For every 25mins operation of the UAV, generate 1/5 of the used power value and include to the remaining

Else

UAV consumed power = UAV consumed power + 1.

End

This simple step algorithm will be able to regenerate one-fifth of the used UAV power for every 25mins and this should offer a better energy efficiency of the UAV amongst every other proposed energy efficiency technique in literature. This is because all energy efficiency proposed algorithm before now has centred mostly on extending the UAVs operation power to few hours beyond whatever was obtainable. Hence this study looked beyond that to proposed how the UAV can be kept in operation as long as is being required in order to meet up with the expectations of the upcoming 6G integration technology**.**

Conclusion and Recommendation

Considering the expectations of the upcoming 6G technology, this study argued that the 6G integration should be a seamless process considering the roles of each of the integration layers/system. Hence, the study centred on how to improve greatly on the existing UAV energy efficiency. The power control factor required for the UAV adjustment in the process of establishing connection between itself and either the BS or satellite, was modified to have a gradual step-by-step power control adjustment. More so, a UAV power regeneration algorithm was also developed in this study, to aid the maintenance of UAV operations as long as it is being required. This study is being recommended to the 3GPP technical body in charge of 6G specification to partner with UAV designers to factor the UAV power regeneration model for the upcoming 6G technology.

Acknowledgement

We gratefully acknowledge the contributions of all team members.

References

Ajaegbu, C., Adetunji, O.O., Awodele, O., Ogunlere, S.O., & Kanu, R.U. (2019). Deployment of Drone Base Station in Designated Area of a Campus Network. *Indian Journal of Science and Technology*, *12*(9). https://doi.org/10.17485/ijst/2019/v12i9/141133

Akhtar, M. W., Hassan, S. A., Ghaffar, R., Jung, H., Garg, S., & Hossain, M. S. (2020). The shift to 6G communications: vision and requirements. *Human-centric Computing and Information Sciences*, *10*(53), 1-27.

Alcober, F. (2018). AI takes root, helping farmers identify diseased plants. Retrieved August 06, 2021, from https://www.blog.google/technology/ai/ai-takes-root-helping-farmers-identity-diseased-plants/?hl=tr-TR&%3Bskip_cache=false&skip_cache=false

Angus, S., Raschky, P., & Ackermann, K. (2020). How Novel Coronavirus (covid-19) is putting a Strain on Global Internet Networks. Retrieved August 06, 2021, from https://www2.monash.edu/impact/articles/economics/how-novel-coronavirus-covid-19-is-putting-a-strain-on-global-internet-networks/

Arakpogun, E. O., Elsahn, Z., Nyuur, R. B., & Olan, F. (2020). Threading the needle of the digital divide in Africa: The barriers and mitigations of infrastructure sharing. *Technological Forecasting and Social Change, 161*(120263), 1-13.

Arakpogun, E. O., Elsahn, Z., Olan, F., & Elsahn, F. (2021). Artificial Intelligence in Africa: Challenges and Opportunities. In A. Hamdan, A. E. Hassanien, A. Razzaque, & B. Alareeni (Eds.), *The Fourth Industrial Revolution: Implementation of Artificial Intelligence for Growing Business Success* (Vol. 935, pp. 375-388). Basingstoke: Springer Nature.

Arakpogun, E. O., Wanjiru, R., & Whalley, J. (2017). Impediments to the implementation of universal service funds in Africa – A cross-country comparative analysis. *Telecommunications Policy, 41*(7-8), 617-630.

Azari, M. M., Rosas, F., Chen, K.-C., & Pollin, S. (2018). Ultra-Reliable UAV Communication Using Altitude and Cooperation Diversity. *IEEE Transactions on Communications, 66*(1), 330–344. https://doi.org/10.1109/tcomm.2017.2746105

Bacco, M., Davoli, F., Giambene, G., Gotta, A., Luglio, M., Marchese, M., Patrone, F., & Roseti, C. (2019). Networking Challenges for Non-Terrestrial Networks Exploitation in 5G. Retrieved from: https://openportal.isti.cnr.it/data/2019/404819/2019_%20404819.preprint.pdf

Bhat, J.R., & Alqahtani, S.A. (2021). 6G Ecosystem: Current Status and Future Perspective. *IEEE Access, 9*(1). https://doi.org/10.1109/ACCESS.2021.3054833

Boero, L., Bruschi, R., Davoli, F., Marchese, M., & Patrone, F. (2018). Satellite Networking Integration in the 5G Ecosystem: Research Trends and Open Challenges. *IEEE Network, 32*(5), 9-15. https://doi.org/10.1109/MNET.2018.1800052

Courville, N., Bischl, H., Lutz, E., Svigelj, A., Chan, P.M., Papapetrou, E., & Asorey-Cacheda, R. (2007). Hybrid satellite/terrestrial networks: state of the art and future perspectives. *IWSTI '07: QShine 2007 Workshop: Satellite/Terrestrial Interworking* (pg. 1-7). https://doi.org/10.1145/1577776.1577777

Ehui, S. (2020). Protecting food security in Africa during COVID-19. Retrieved August 06, 2021, from https://www.brookings.edu/blog/africa-in-focus/2020/05/14/protecting-food-security-in-africa-during-covid-19/

Evans, B., Bousquet, M., & Maral, G. (2005). Integration of Satellite and Terrestrial Systems in Future Multimedia Communication. *IEEE Wireless Communication, 12*(5), 72–80. https://doi.org/10.1109/MWC.2005.1522108

Food and Agriculture Organization. (2019). *The State of Food Security and Nutrition in the World 2019: Safeguarding Against Economic Slowdowns and Downturns.* Rome: The Food and Agriculture Organization (FAO).

Fu, X., Ding, T., Kadoch, M., & Cheriet, M. (2020). Uplink Performance Analysis of UAV Cellular Communications with Power Control. *2020 International Wireless Communications and Mobile Computing (IWCMC)* (pp. 676-679). IEEE. https://doi.org/10.1109/iwcmc48107.2020.91484

Fu, X., Ding, T., Peng, R., Liu, C., & Cheriet M. (2021). Joint UAV channel modeling and power control for 5G IoT networks. *EURASIP Journal on Wireless Communications and Networking, 2021*, 106. https://doi.org/10.1186/s13638-021-01988-2

Gawas, A. U. (2015). An Overview on Evolution of Mobile Wireless Communication Networks: 1G-6G. *International Journal on Recent and Innovation Trends in Computing and Communication, 3*(5), 3130-3133.

Hobday, L., & Sas, N. (2021, April 01). Coronavirus affecting internet speeds, as COVID-19 puts pressure on the network. Retrieved August 06, 2021, from https://www.abc.net.au/news/2020-04-01/coronavirus-internet-speeds-covid19-affects-data-downloads/12107334

Hu, J., Li, G., Bian, D., Shi, S., Ge, R., & Gou, L. (2020). Energy-efficient cooperative spectrum sensing in cognitive satellite terrestrial networks. *IEEE Access*, *8*, 161396-161405. https://doi.org/10.1109/ACCESS.2020.3020846

Hydher, H., Jayakody, D.N.K., Hemachandra, K.T., & Samarasinghe, T. (2020). Intelligent UAV Deployment for a Disaster-Resilient Wireless Network. *Sensors*, *20*(21), 6140. https://doi.org/10.3390/s20216140

Jou, B.T., Vidal, O., Cahill, J., Arnal, F., Houssin, J., Boutin, M., Chau, D.K., Liolis, K., & Sendra, S. D. (2018). Architecture Options for Satellite Integration into 5G Networks. 2018 European Conference on Networks and Communications (EuCNC): Wireless, Optical and Satellite Networks (WOS). IEEE. Retrieved from: https://www.researchgate.net/profile/Pouria-Sayyad-Khodashenas/publication/327423501_Architecture_Options_for_Satellite_Integration_into_5G_Networks/links/5b8e8914a6fdcc1ddd0d0953/Architecture-Options-for-Satellite-Integration-into-5G-Networks.pdf

Kapovits, A., Corici, M., Covaci, S., Geurtz, A., Gheorghe-Pop, I., Riemer, B., & Weber, A., (2016). Assessing satellite-terrestrial integration opportunities in the 5G environment. A business and technology-oriented whitepaper positioning satellite solution in the emerging 5G landscape. Retrieved from: https://artes.esa.int/sites/default/files/Whitepaper%20-%20Satellite_5G%20final.pdf

Khalili, H., Khodashenas, S., Guija, D., & Siddiqui, S. (2019). Introducing Terrestrial Satellite Resource Orchestration Layer. IEEE. Retrieved from: https://www.researchgate.net/profile/Pouria-Sayyad-Khodashenas/publication/334465473_Introducing_Terrestrial_Satellite_Resource_Orchestration_Layer/links/5d2c720c458515c11c31ac56/Introducing-Terrestrial-Satellite-Resource-Orchestration-Layer.pdf

Knight, W. (2017). Meet the Chinese Finance Giant That's Secretly an AI Company. https://www.technologyreview.com/2017/06/16/151178/ant-financial-chinas-giant-of-mobile-payments-is-rethinking-finance-with-ai/

Kshetri, N. (2020). Artificial Intelligence in Developing Countries. *IEEE Annals of the History of Computing*, *22*(4), 63-68.

Lee, D. (2018). Why Big Tech pays poor Kenyans to teach self-driving cars. Retrieved August 06, 2021, from https://www.bbc.co.uk/news/technology-46055595

Lee, Y. L., Qin, D., Wang, L. C., & Sim, G. H. (2020). 6G massive radio access networks: Key applications, requirements and challenges. *IEEE Open Journal of Vehicular Technology*, *2*, 54-66. https://doi.org/10.1109/OJVT.2020.3044569

Li, T., Zhou, H., Luo, H., & Yu, S. (2017). SERvICE: A software defined framework for integrated space-terrestrial satellite communication. *IEEE Transactions on Mobile Computing*, *17*(3), 703-716. https://doi.org/10.1109/TMC.2017.2732343

Li, X., Feng, W., Wang, J., Chen, Y., Ge, N., & Wang, C. X. (2020). Enabling 5G on the ocean: A hybrid satellite-UAV-terrestrial network solution. *IEEE Wireless Communications*, *27*(6), 116-121. https://doi.org/10.1109/MWC.001.2000076

Li, Z., Wang, Y., Liu, M., Sun, R., Chen, Y., Yuan, J., & Li, J. (2019). Energy Efficient Resource Allocation for UAV-Assisted Space-Air-Ground Internet of Remote Things Networks. *IEEE Access*, *7*, 145348–145362. https://doi.org/10.1109/access.2019.2945478

Liolis, K., Geurtz, A., Sperber, R., Schulz, D., Watts, S., Poziopoulou, G., ... & Chuberre, N. (2019). Use cases and scenarios of 5G integrated satellite-terrestrial networks for enhanced mobile broadband: The SaT5G approach. *International Journal of Satellite Communications and Networking*, *37*(2), 91-112. https://doi.org/10.1002/sat.1245

Liu, Q., Sarfraz, S., & Wang, S. (2020). An Overview of Key Technologies and Challenges of 6G. In X. Chen, H. Yan, Q. Yan, & X. Zhang (Eds.), *Machine Learning for Cyber Security. ML4CS 2020. Lecture Notes in Computer Science* (Vol. 12487, pp. 315-326). Basel: Springer, Cham.

Lu, X., Xiao, L., Dai, C., & Dia, H. (2020). UAV-Aided Cellular Communications with Deep Reinforcement Learning Against Jamming. *IEEE Wireless Communication, 27*(4), 48-53. https://doi.org/10.1109/MWC.001.1900207

Lu, Y., & Zheng, X. (2020). 6G: A survey on technologies, scenarios, challenges, and the related issues. *Journal of Industrial Information Integration*, *19*, 100158. https://doi.org/10.1016/j.jii.2020.100158

Manning, R. A., Engelke, P., & Klein, S. (2018). *The Global Innovation Sweepstakes*. Washington, DC: The Scowcroft Center for Strategy and Security: The Atlantic Council of the United States.

Manzoor, A., Kim, D. H., & Hong, C. S. (2019). Energy Efficient Resource Allocation in UAV-based Heterogeneous Networks. *2019 20th Asia-Pacific Network Operations and Management Symposium (APNOMS).* https://doi.org/10.23919/apnoms.2019.8892933

Marchese, M., Moheddine, A., & Patrone, F. (2019). IoT and UAV Integration in 5G Hybrid Terrestrial-Satellite Networks. *Sensors, 19*(17), 3704. https://doi.org/10.3390/s19173704

Marchese, M., Moheddine, A., & Patrone, F. (2020). UAV and Satellite Employment for the Internet of Things Use Case. *2020 IEEE Aerospace Conference*. https://doi.org/10.1109/aero47225.2020.917270

OECD (2020). OECD Policy Responses to Coronavirus (COVID-19): Keeping the Internet up and running in times of crisis. Retrieved August 06, 2020, from https://www.oecd.org/coronavirus/policy-responses/keeping-the-internet-up-and-running-in-times-of-crisis-4017c4c9/

Oughton, E. J., & Jha, A. (2021). Supportive 5G Infrastructure Policies are Essential for Universal 6G: Assessment Using an Open-Source Techno-Economic Simulation Model Utilizing Remote Sensing. *IEEE Access, 9*, 101924-101945.

Saeed, N., Almorad, H., Dahrouj, H., Al-Naffouri, T. Y., Shamma, J. S., & Alouini, M. S. (2021). Point-to-point communication in integrated satellite-aerial 6G networks: State-of-the-art and future challenges. *IEEE Open Journal of the Communications Society, 2*, 1505-1525. https://doi.org/10.1109/OJCOMS.2021.3093110

Schwab, K. (2017). *The Fourth Industrial Revolution*. New York: Crown Business.

Sekander, S., Tabassum, H., & Hossain, E. (2018). Multi-Tier Drone Architecture for 5G/B5G Cellular Networks: Challenges, Trends, and Prospects. IEEE Communications Magazine, 56(3), 96–103. https://doi.org/10.1109/mcom.2018.1700666

Sekaran, R., Patan, R., Raveendran, A., Al-Turjman, F., Ramachandran, M., & Mostarda, L. (2020). Survival study on blockchain based 6G-enabled mobile edge computation for IoT automation. *IEEE Access, 8*, 143453-143463.

Shirotori, M., Wu, D., Antunes, B., & Valentine, V. (2021). COVID-19 shows need to close financial inclusion gender gap. Retrieved August 06, 2021, from https://unctad.org/news/covid-19-shows-need-close-financial-inclusion-gender-gap

Singh, A. P., Nigam, S., & Gupta, N. K. (2007). A Study of Next Generation Wireless Network 6G. *Int. J. of Innovative Research in Computer and Communication Engineering, 4(*1), 871-874.

Souter, D. (2021). Inside the Digital Society: Digital COVID - Looking back and forward. Retrieved August 04, 2021, from https://www.apc.org/en/blog/inside-digital-society-digital-covid-looking-back-and-forward

Tariq, F., Khandaker, M. R., Wong, K. K., Imran, M. A., Bennis, M., & Debbah, M. (2020). A speculative study on 6G. *IEEE Wireless Communications*, *27*(4), 118-125. https://doi.org/10.1109/MWC.001.1900488

UNHDR. (2018). *Human Development Indices and Indicators: 2018 Statistical Update*. New York: United Nations Human Rights Council (UNHDR).

Verdone, R., & Mignardi, S. (2018). Joint Aerial-Terrestrial Resource Management in UAV-Aided Mobile Radio Networks. *IEEE Network*, *32*(5), 70–75. https://doi.org/10.1109/mnet.2018.1800036

Wang, J., Jiang, C., Wei, Z., Pan, C., Zhang, H., & Ren, Y. (2018). Joint UAV hovering altitude and power control for space-air-ground IoT networks. *IEEE Internet of Things Journal*, *6*(2), 1741-1753. https://doi.org/10.1109/JIOT.2018.2875493

World Bank. (2019, April 19). Financial Inclusion on the Rise, But Gaps Remain, Global Findex Database Shows. Retrieved August 06, 2021, from https://www.worldbank.org/en/news/press-release/2018/04/19/financial-inclusion-on-the-rise-but-gaps-remain-global-findex-database-shows

Xu, X., & Zeng, Y. (2019). Cellular-Connected UAV: Performance Analysis with 3D Antenna Modelling. *IEEE International Conference on Communications Workshops* (ICC Workshops). https://doi.org/10.1109/ICCW.2019.8756719

You, X., Wang, C.-X., Huang, J., Gao, X., Zhang, Z., Wang, M., … Liang, Y.-C. (2020). Towards 6G wireless communication networks: vision, enabling technologies, and new paradigm shifts. *Science China Information Sciences*, *64*(1). https://doi.org/10.1007/s11432-020-2955-6

Zhen L., Kashif A., Yu K., Al-Otaibi Y.D., Foh C.H., and Xiao P., (2020). Energy-Efficient Random Access for LEO Satellite-Assited 6G Internet of Remote Things. *IEEE Internet of things Journal*, *8*(7), 5114-5128. https://doi.org/10.1109/JIOT.2020.3030856

Ziegler, V., Viswanathan, H., Flinck, H., Hoffmann, M., Räisänen, V., & Hätönen, K. (2020). 6G architecture to connect the worlds. *IEEE Access*, *8*, 173508-173520. https://doi.org/10.1109/ACCESS.2020.3025032